nuudo.

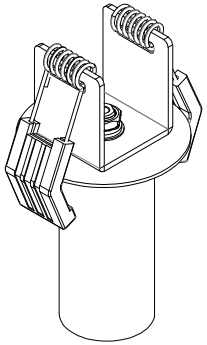

1

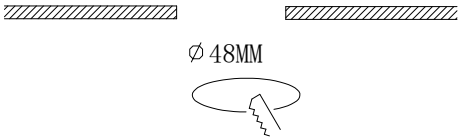
∅48MM

2

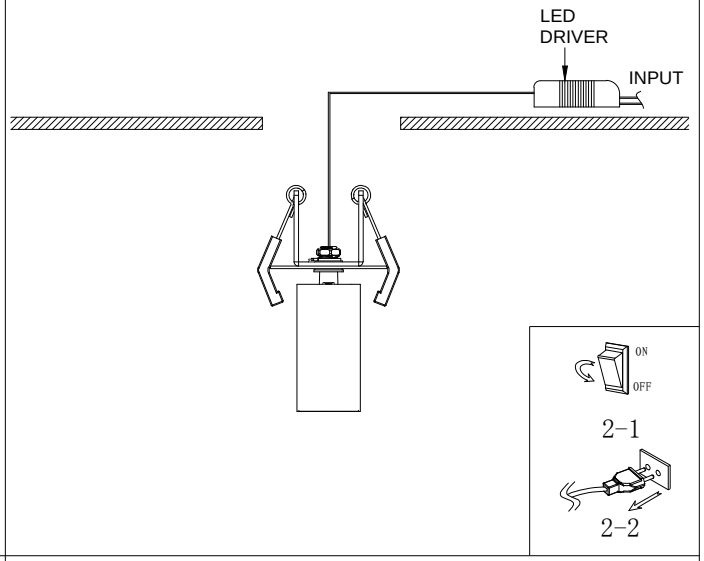
LED
DRIVER
INPUT
ON
OFF
2-1
2-2

3

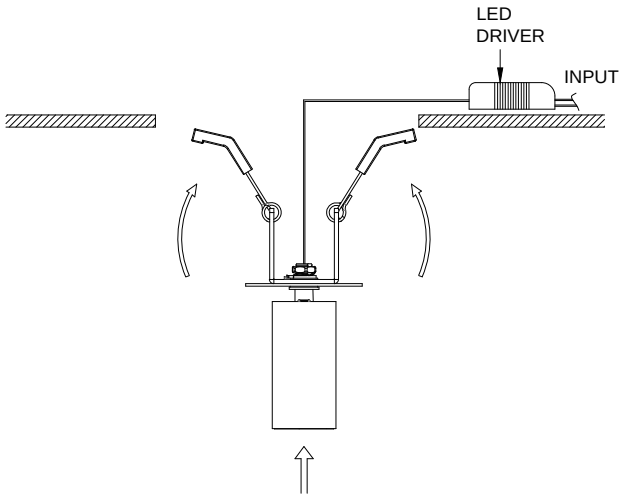
LED
DRIVER
INPUT

4

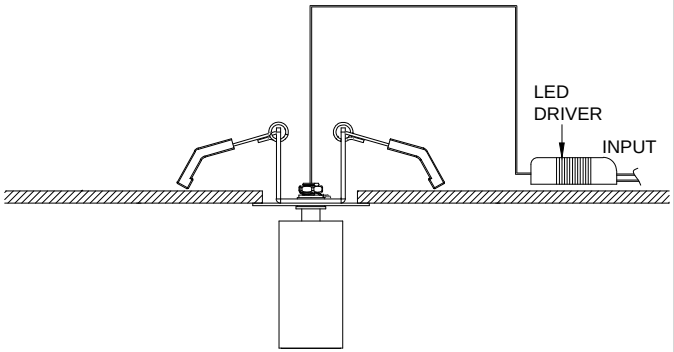
LED
DRIVER
INPUT

5

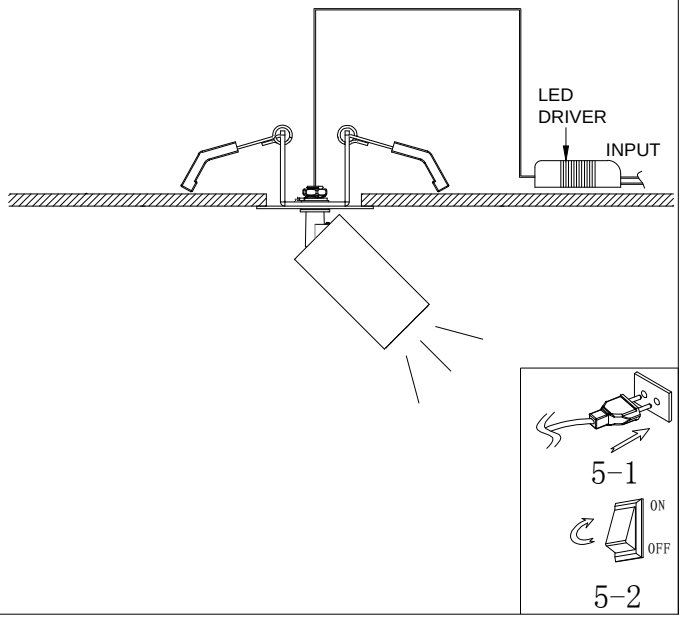
LED
DRIVER
INPUT
5-1
ON
OFF
5-2